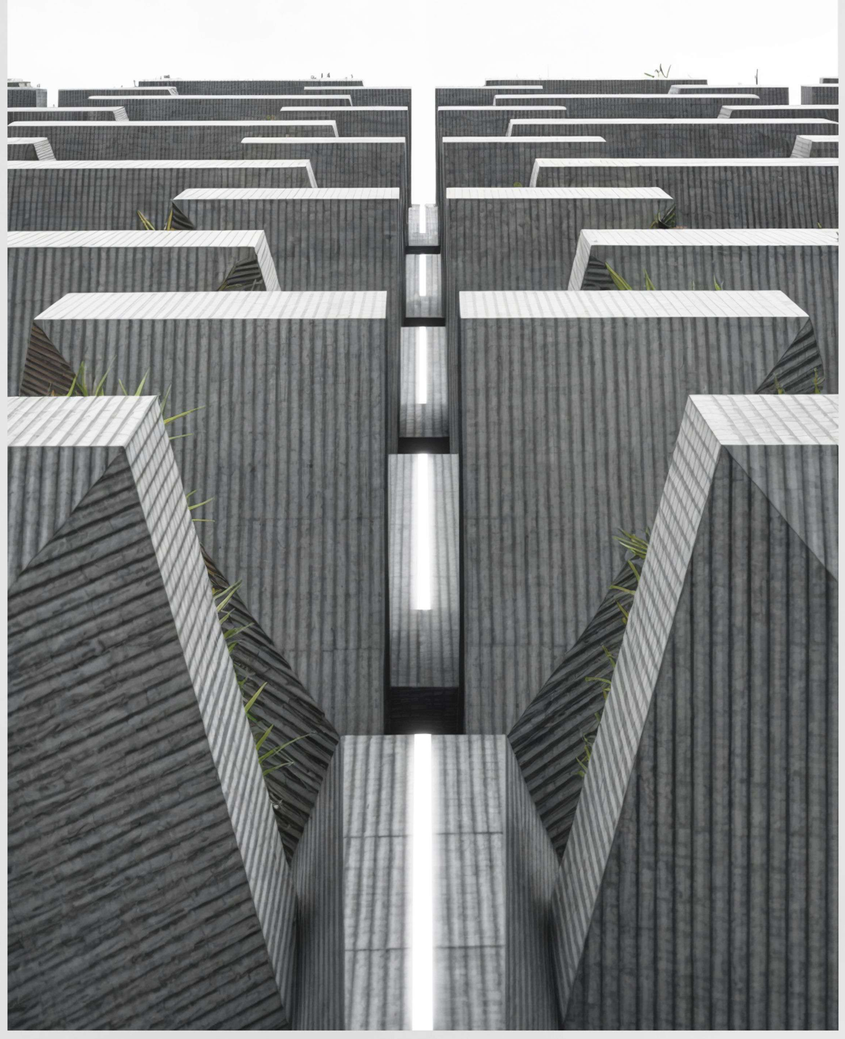

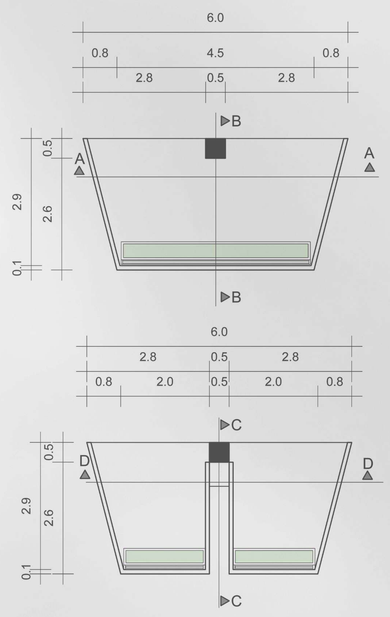

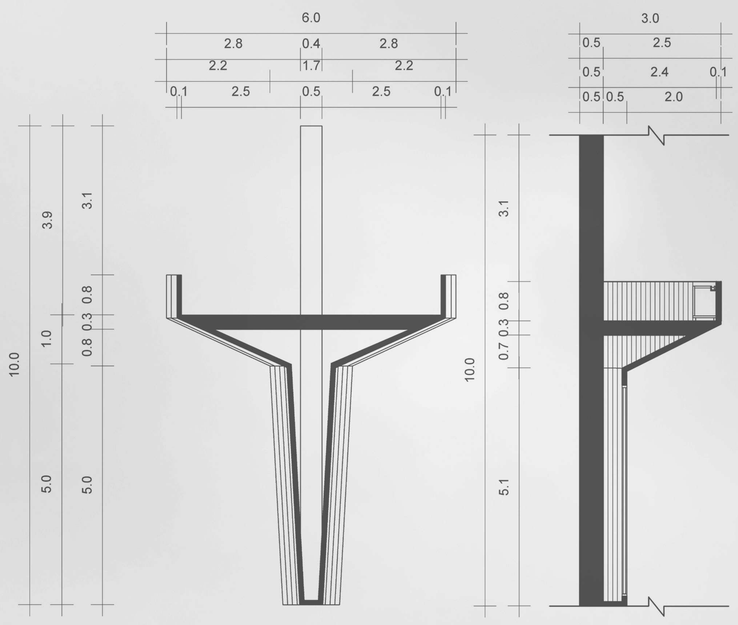

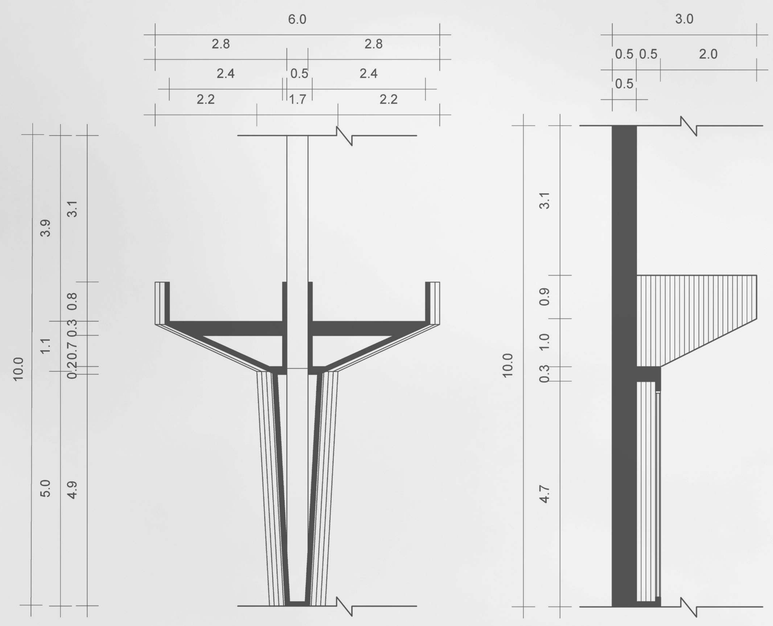
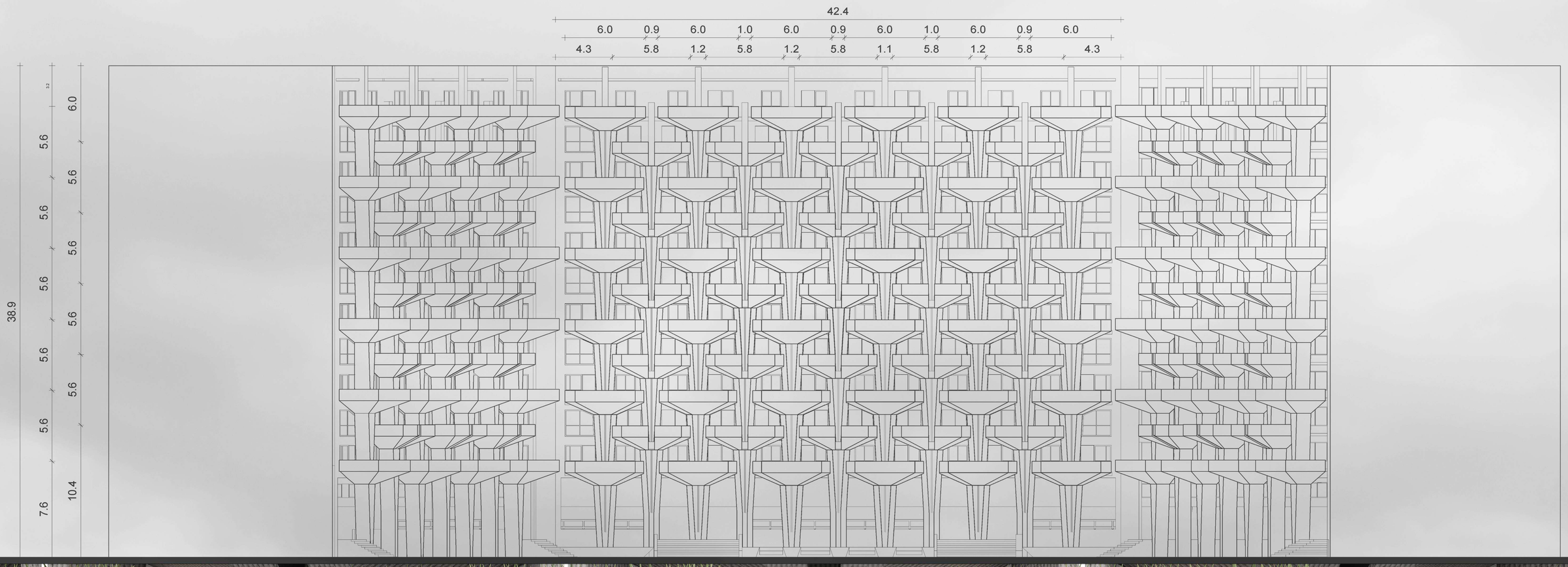
The balcony area in the first type is approximately 16 square meters, providing ample outdoor space for relaxation and leisure. In the second type, there are two separate balconies, each measuring 7 square meters, offering flexibility in usage and enhancing the connection with the outdoors. A small portion of these areas is thoughtfully allocated to flower boxes and greenery, contributing to a more pleasant atmosphere, improving air quality, and integrating natural elements into the architectural design.